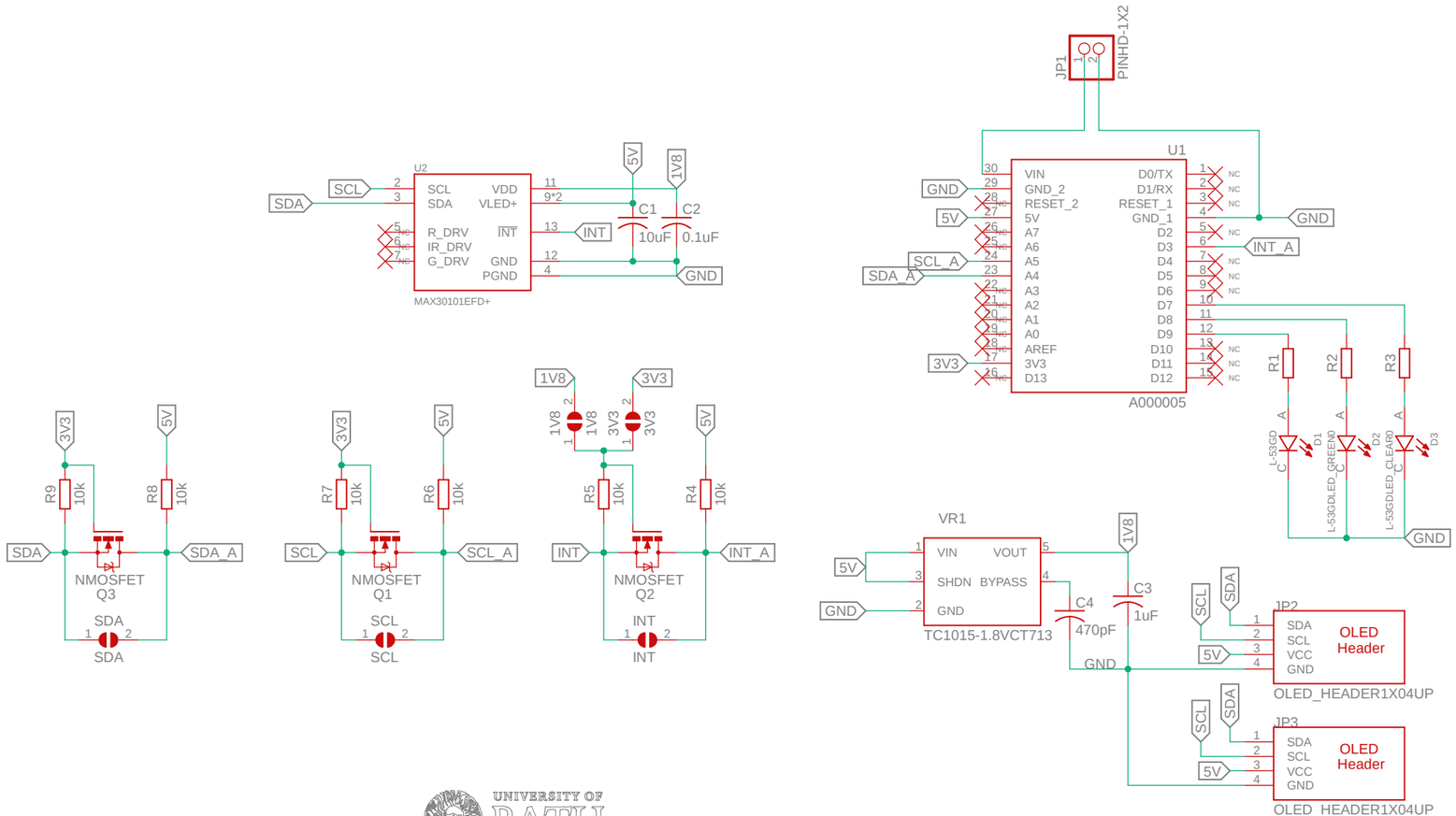
U2
SCL
SDA
VDD
VLED+
R_DRV
IR_DRV
G_DRV
INT
GND
PGND
MAX30101EFD+
C1
10uF
C2
0.1uF
5V
1V8
GND
JP1
PINHD-1X2
U1
VIN
GND_2
RESET_2
5V
A7
A6
A5
A4
A3
A2
A1
A0
AREF
3V3
D13
D0/TX
D1/RX
RESET_1
GND_1
D2
D3
D4
D5
D6
D7
D8
D9
D10
D11
D12
SCL_A
SDA_A
INT_A
A000005
R1
R2
R3
L-53GD
L-53GDLED_GREEN0
L-53GDLED_CLEAR0
R9
10k
R8
10k
NMOSFET
Q3
R7
10k
R6
10k
NMOSFET
Q1
R5
10k
R4
10k
NMOSFET
Q2
VR1
VIN
VOUT
SHDN
BYPASS
TC1015-1.8VCT713
C4
470pF
C3
1uF
JP2
JP3
OLED
Header
OLED_HEADER1X04UP
UNIVERSITY OF
BATH
SpO2 Sensor Board
Version 2.1
Sanjae King
06/06/2023